Design a 4-bit shift register circuit to input the bits one at a time over a single line and then output the bits one at a time over a single line.
Design a 4-bit shift register circuit to input the bits one at a time over a single line and then output the bits at once.
Design a 4-bit shift register circuit to input the bits at once and then output the bits one at a time over a single line.

Objective:- (i) To design a 4-bit shift register circuit to input the bits one at a time over a single line and then output the bits one at a time over a single line.
(ii) To design a 4-bit shift register circuit to input the bits one at a time over a single line and then output the bits at once.
(iii) To design a 4-bit shift register circuit to input the bits at once and then output the bits one at a time over a single line.

Theory:-
Shift registers:- A group of flip flops which is used to store multiple bits of data and the data is moved from one flip flop to another is known as Shift Register. The bits stored in registers shifted when the clock pulse

is applied within and inside or outside the registers. To form an n-bit shift register, we have to connect n number of flip flops.

SISO(Serial In Serial Out):- In "Serial Input Serial Output", the data is shifted "IN" or "Out" serially. In SISO, a single bit is shifted at a time in either right or left direction under clock control.

SIPO(Serial In Parrallel Out):- In the "Serial In Parallel Out" shift register, the data is passed serially to the flip flop and outputs are fetched in a parallel way. The data is passed bit by bit in the register, and the output remains disabled untill the data is not passed to the data input. When the data is passed to the register, the outputs are enabled, and the flip flops contain their return value.

PISO(Parallel In Serial Out):- In the "Parallel In Serial Out" register, the data is entered in a parallel way, and the outcomes come easily & serially. The input and outputs are connected through the combinational circuit. Through this combinational circuit, the binary input B0, B1, B2, B3 are passed. The shift mode and the load mode are the two modes in which the "PISO" circuit works.

Date: / /

Block Diagram:-

SISO:-

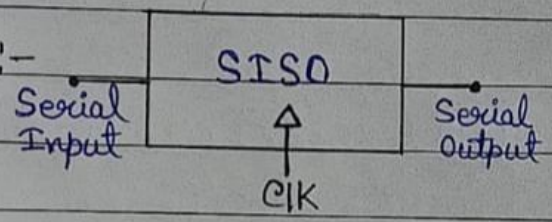

SIPO:-

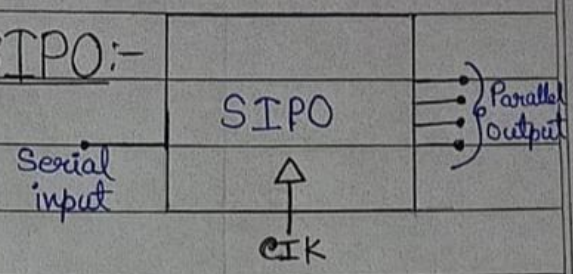

PISO:-

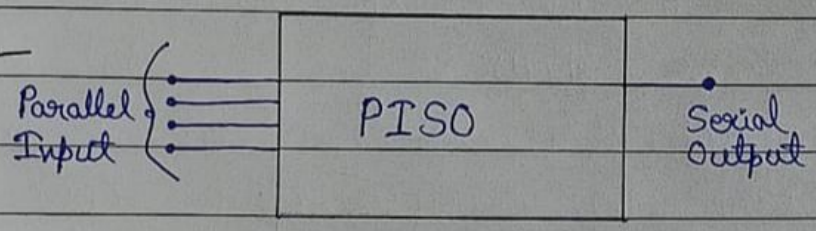

Truth Table:-

SISO:-

CIK	Din	Q_3	Q_2	Q_1	Q_0
Initially		0	0	0	0
↑	1	1	0	0	0
↑	0	0	1	0	0
↑	1	1	0	1	0
↑	1	1	1	0	1

SIPO:-

CIK	Din	Q_3	Q_2	Q_1	Q_0
Initially		0	0	0	0
↑	1	1	0	0	0
↑	0	0	1	0	0
↑	1	1	0	1	0
↑	1	1	1	0	1

Date : /

Circuit Diagram :-

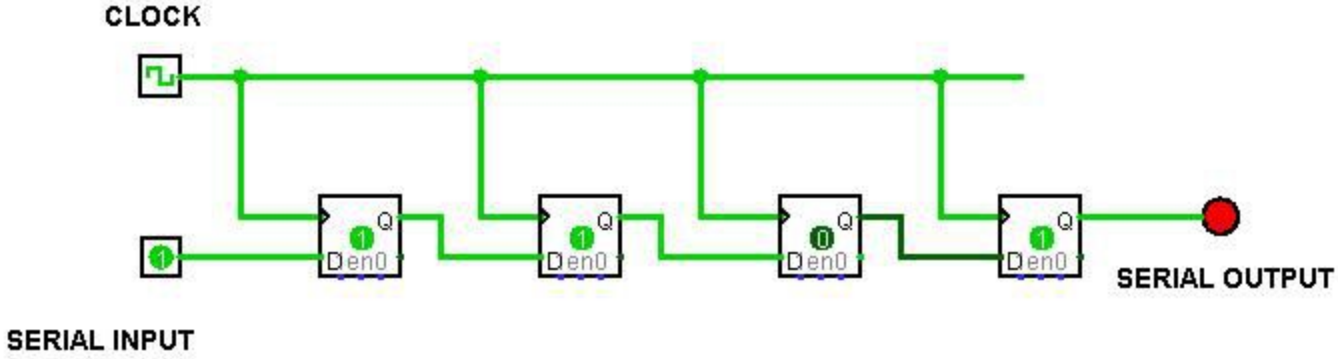

SERIAL IN SERIAL OUT

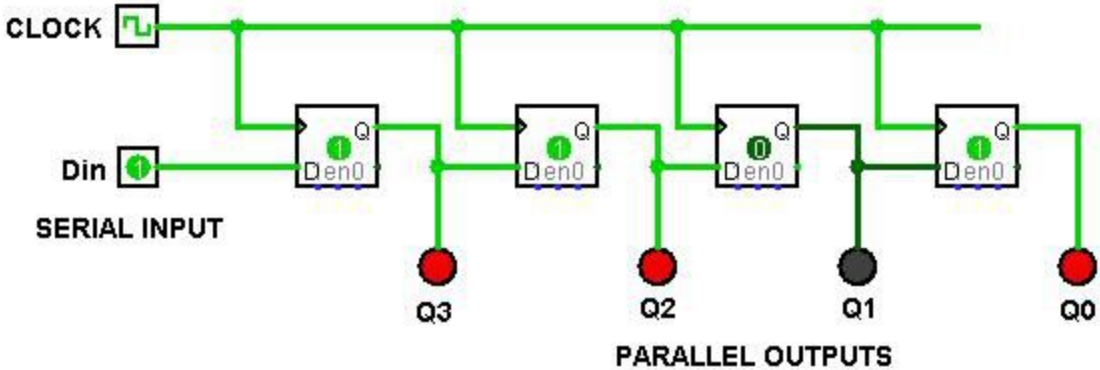

SERIAL IN PARALLEL OUT

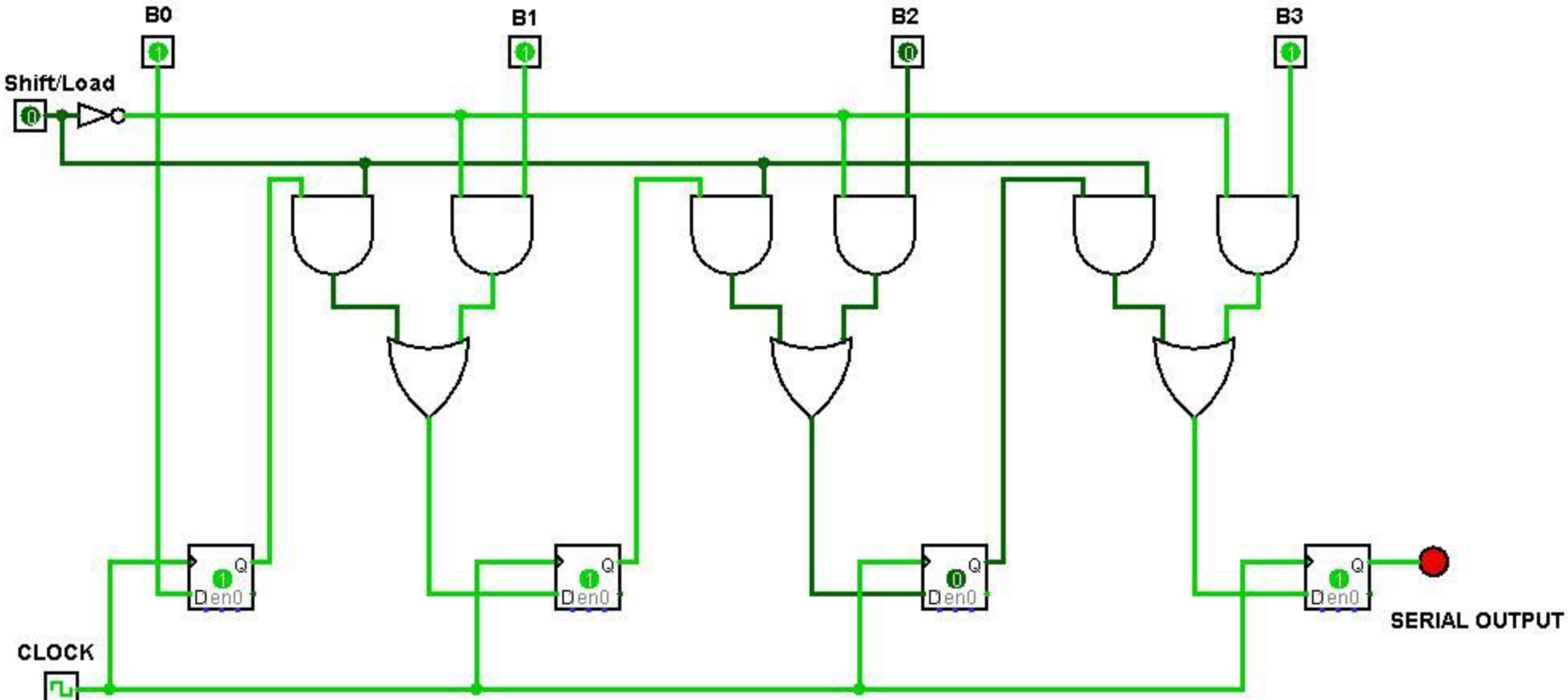

PARALLEL IN SERIAL OUT

Conclusion:- The shift registers are used for data transfer and manipulation. The serial-in serial-out shift registers is used to produce time delay to digital circuits.